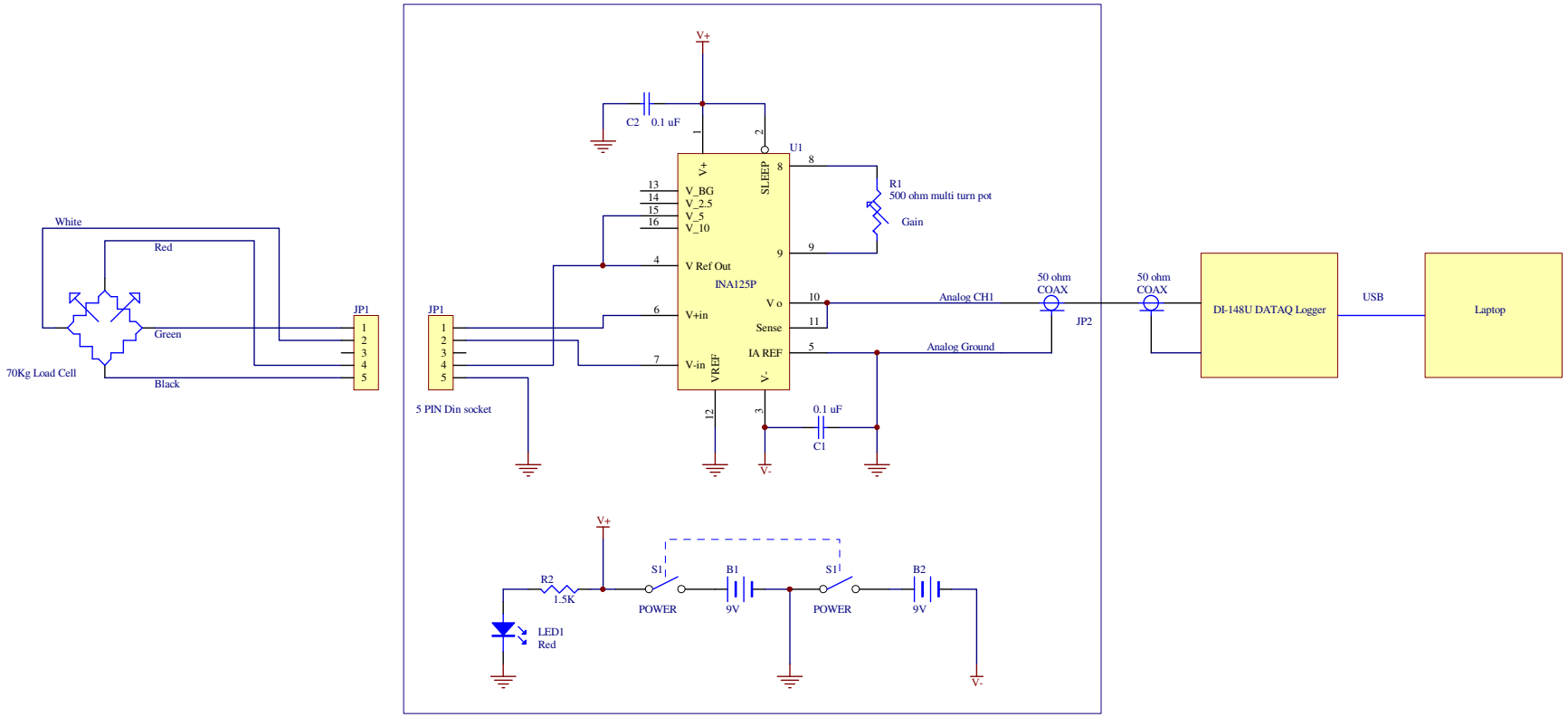

Copyright © 2008 Air Command Water Rockets

Title	Load Cell Amplifier	
Size B	Number	Revision V 1.2
Date: 14-Sep-2008		Sheet of 1/1
File: C:\Data\..\LoadCellAmp.Sch		Drawn By: George Katz